VAHTERUS

# The Original Plate & Shell Heat Exchanger

**First sustainable technology. Custom-made for your business.**

# Company in brief

VAHTERUS

# Company in brief, Vahterus then and now

**1990**

**2019**

VAHTERUS

# Company in brief

- Established in 1990
- Privately owned
- Subsidiary companies in UK, Germany, USA and China
- Global distributor network in over 50 countries
- Over 95% products exported from Finland

VAHTERUS

# Company in brief, Vahterus in figures

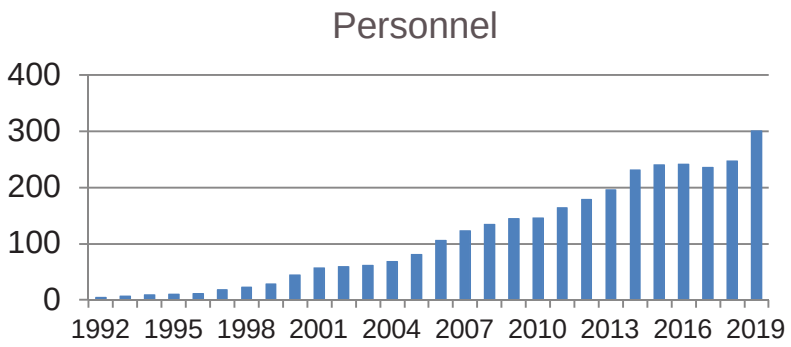


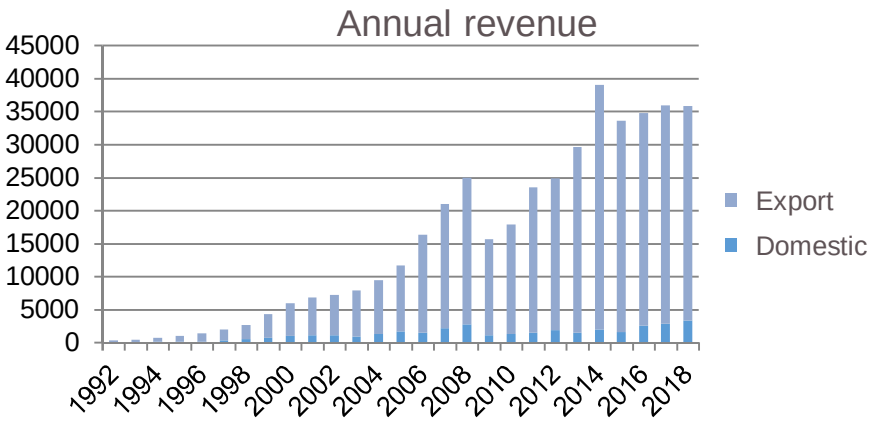


- 300 persons in Finland
- 80 Bachelor or Master degree engineers
- 200 professional at workshop

VAHTERUS

# Company in brief, business sectors


**Applications for the chemical and process**

- Product heaters and coolers
- Gas heaters and coolers
- Heat-recovery exchangers like feed/effluent exchangers
- Overhead condensers and gas liquefiers
- Thermosyphon and kettle reboilers
- Reactor temperature-control heat exchangers
- Cryogenic applications
- Various utility applications


**Applications for the energy industry**

- Steam condensers and generators
- Condensate heaters and coolers
- Exhaust gas recovery
- LNG applications
- Crude oil heaters and coolers
- Gas heaters and coolers
- Hydrocarbon condensers and evaporators


**Applications for the refrigeration industry**

- Evaporators
- Droplet separators
- Evaporators/droplet separators (combined)
- Cascades
- Desuperheaters
- Oil coolers
- Subcoolers
- Condensers

**Key solutions**

- Chillers
- Heat pumps
- Absorbtion plants
- Transcritical solutions

VAHTERUS

# Company in brief, Vahterus R&D

- Steam test laboratory
- Refrigeration test lab with ammonia and CO2
- Liquid/liquid performance test
- Metallurgical Lab
- Thermal shock testing with N2
- Burst test
- In house CFD simulations

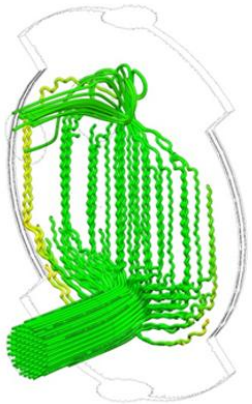

VAHTERUS

# Company in Brief, Quality systems

- Management System
  - ISO 9001:2015 Quality
  - ISO 3834-2:2005 Welding
  - OHSAS 18001:2007 Health and Safety
  - ISO 14001:2004 Environment
  - PED Module B + D, D1
  - ASME U-stamp and R-stamp
  - AD-2000-Merkblatt HP0
  - China Manufacturing License
  - KGS Sertificate (South Korea
  - Welding Procedures
    - EN ISO 15614-1
    - PED 2014/68/EU demands
    - ASME IX
- Design
  - PED 2014/68/EU – CE-mark
  - ASME VIII, div. 1
  - AD-2000 Merkblatt
  - PD5500
  - Lloyd’s Register
  - ABS Europe Ltd.
  - Germanischer Lloyd
  - Bureau Veritas
  - RINA
  - Inspecta
  - GOST-R ja RTN
  - Other by request

VAHTERUS

# PSHE, Advantages

VAHTERUS

# PSHE advantages

**Plate and Frame HE**

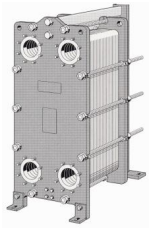

**Advantages:**

+ Compact size
+ Low fouling tendency
+ Close approach temps

**Disadvantages:**

- Low pressure
- Low temperature
- Gasket

**Shell and Tube HE**

**Advantages:**

+ High pressure
+ High temperature
+ No gaskets

**Disadvantages:**

- Large size & weight
- High fouling tendency

## Plate and Shell HE


+ Robust construction
+ Minimized maintenance
+ High and low temperatures +550 / -196°C
+ Compact size
+ Close approach temps
+ Efficient heat transfer

VAHTERUS

# Advantages

## Fully welded and strong construction

- Designed to:
  - **withstand high pressures and temperatures**

- Able to withstand **stress variations** and **thermal shocks**

- The construction allows the plates to expand and contract with thermal expansion and contraction

VAHTERUS

# PSHE well suited for cryogenic use

- Round plate highly resistant to **thermal stresses**
- Material fully 316/316L and PTFE
- Media either refrigerant or glycol. Temperatures and channel flow rate designed to counter freezing potential.
- Temperature difference >250°C
- Superheating of gas to above room temperature without separate superheater unit.

VAHTERUS

# RESISTANCE AGAINST THERMAL & MECHANICAL STRESS

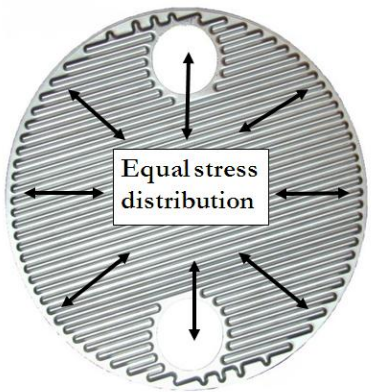


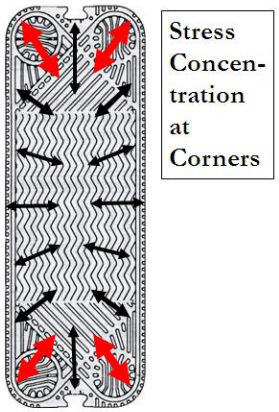


VAHTERUS

# Easy to maintain

- No gaskets with fully welded construction
- Low fouling
- Stretchable plate pack as an option
- Efficient and easy cleaning systems for even the toughest environments

VAHTERUS

# Easy to maintain

## Less fouling with PSHE

- In Shell and Tube heat exchanger **laminar flow** allows deposition of dirt and particles on heat transfer surface

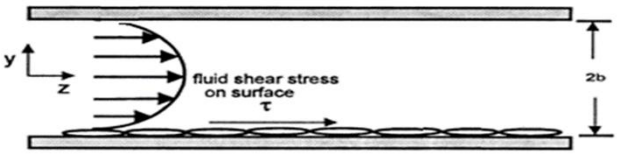


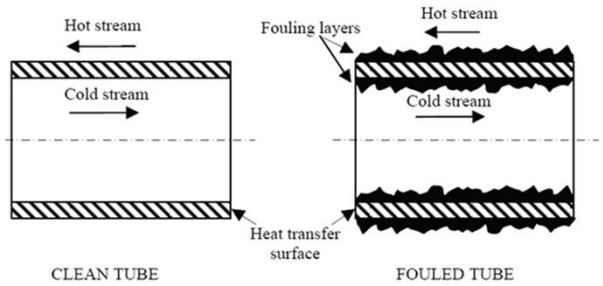


- In Plate and Shell heat exchanger **turbulent flow and high shear stress** keep particles moving and heat transfer surface clean

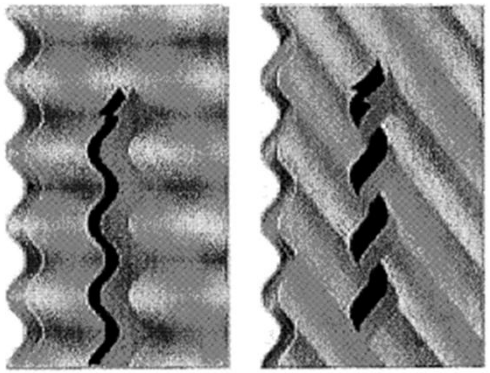

VAHTERUS

# Energy efficiency

- Effective heat transfer
- Highly turbulent flow together with high shear stress keeps particles moving enabling:
  - o High heat transfer
  - o Low fouling
- Scientifically sized and field tested circulation
- Close approach temperatures possible
- Temperature crossover possible

VAHTERUS

# Custom-made

- Designed and manufactured according to customer needs
- Accurate thermal sizing guarantees the best possible heat exchanger solution
- Years of experience in heat transfer and strong product development ensures robust and durable products for our customers

VAHTERUS

# PSHE, Construction

VAHTERUS

# PLATE PACK CONSTRUCTION

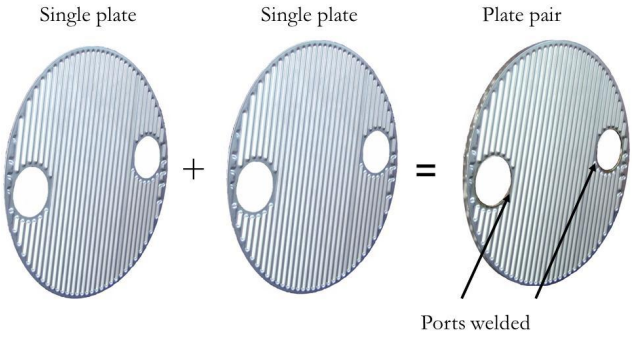


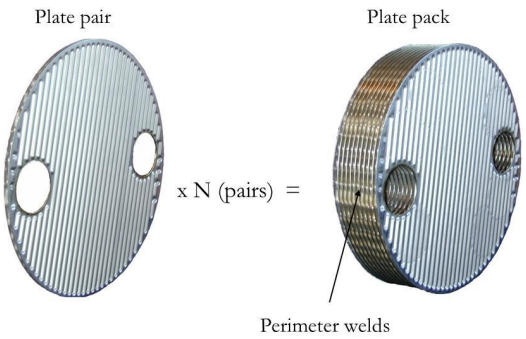


VAHTERUS

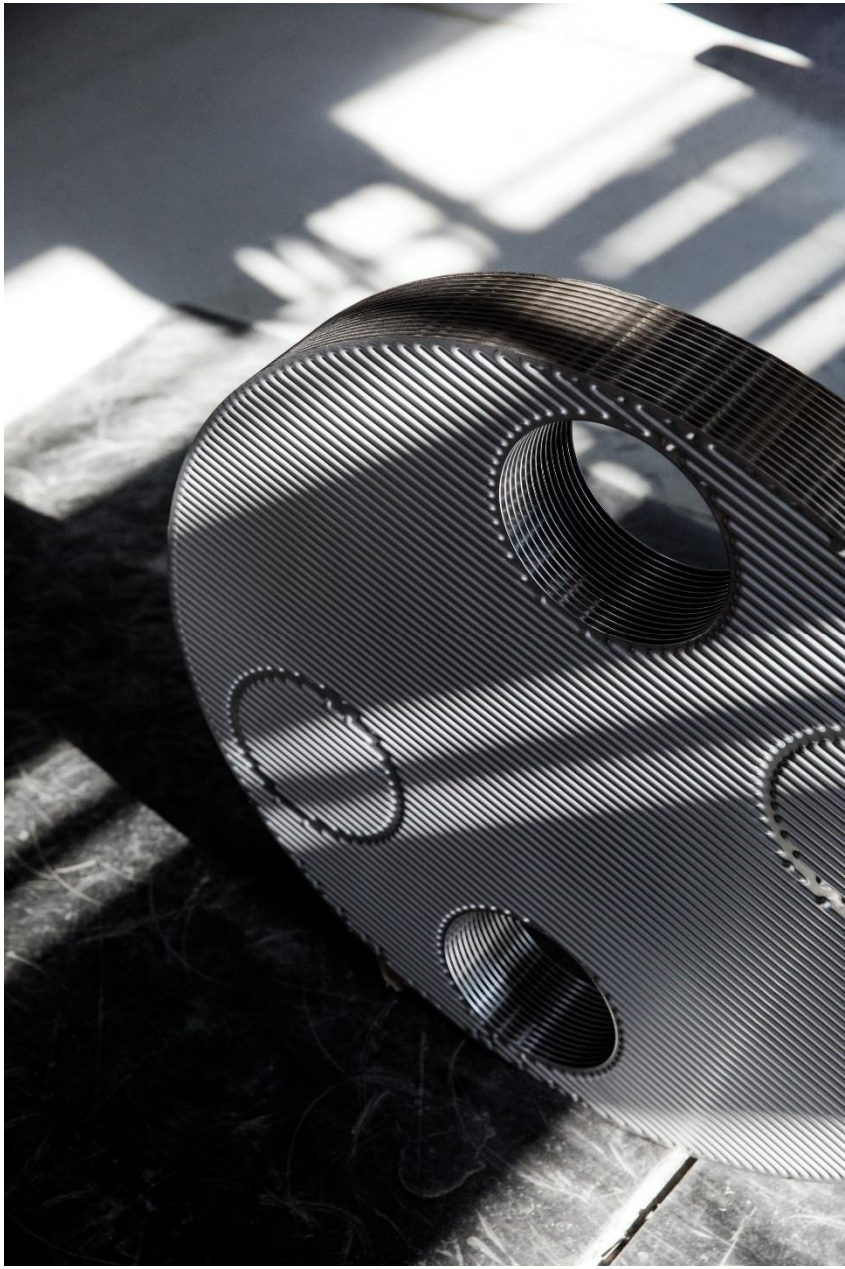

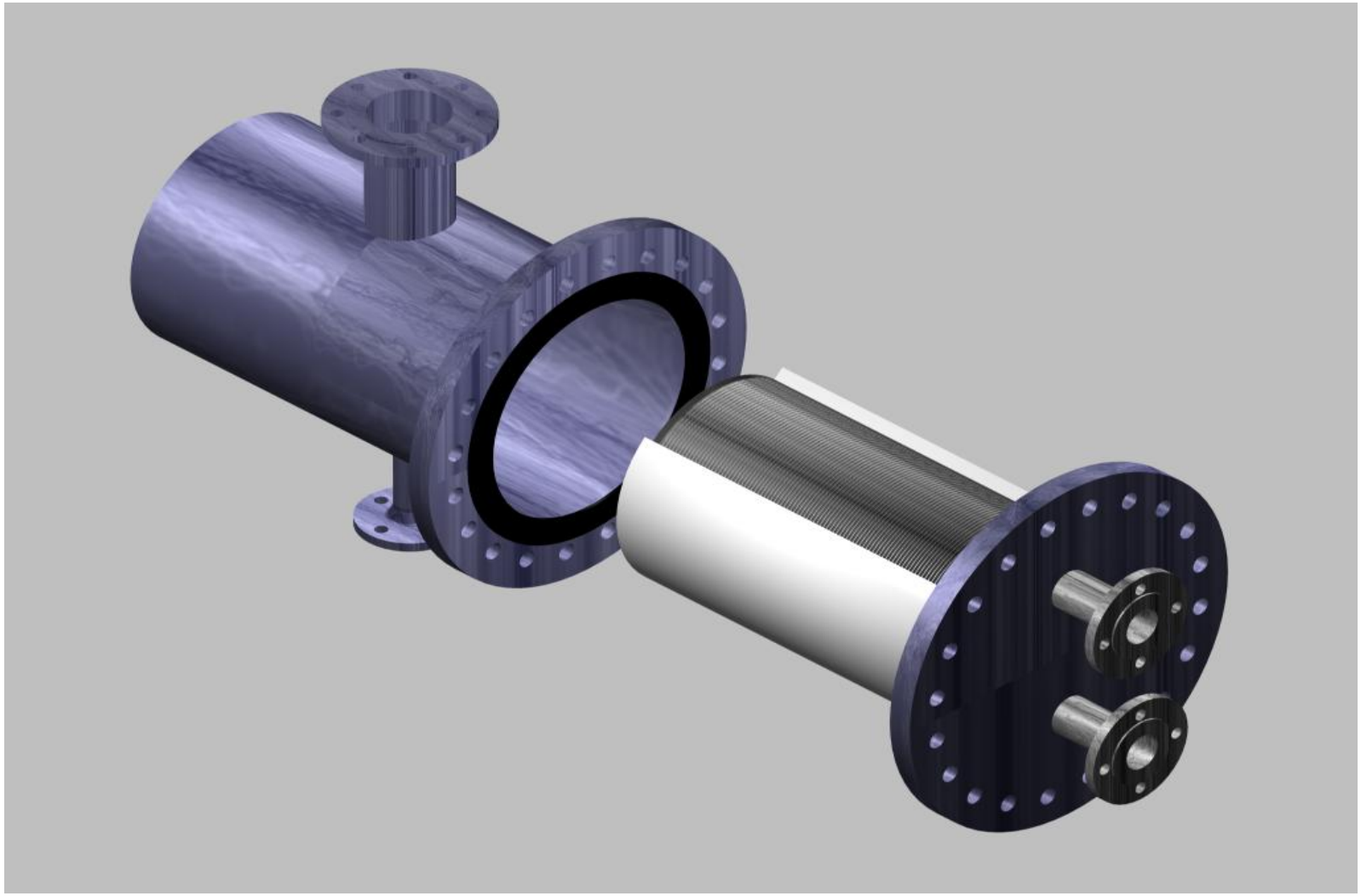

VAHTERUS

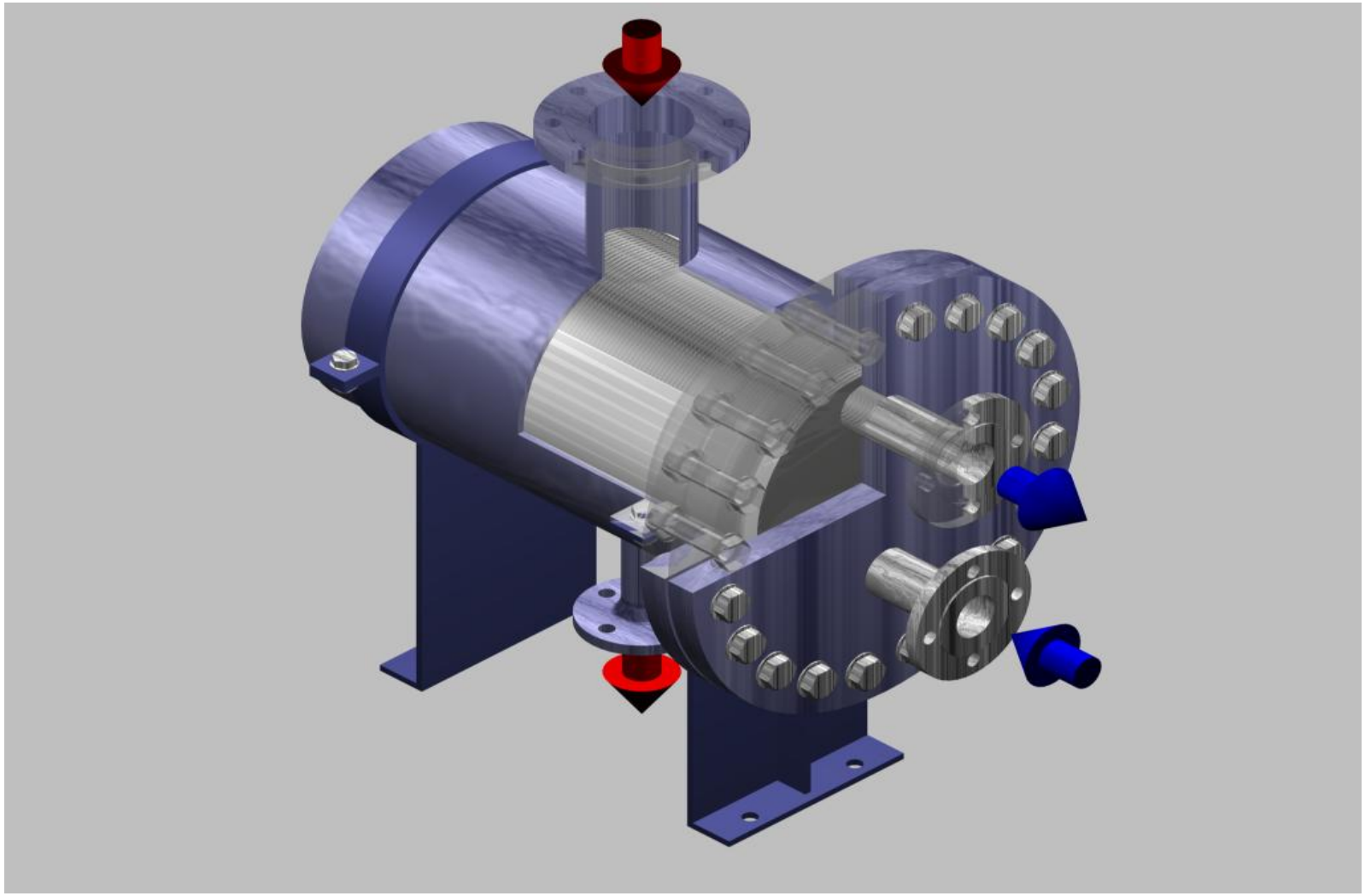

VAHTERUS

# Construction of PSHE

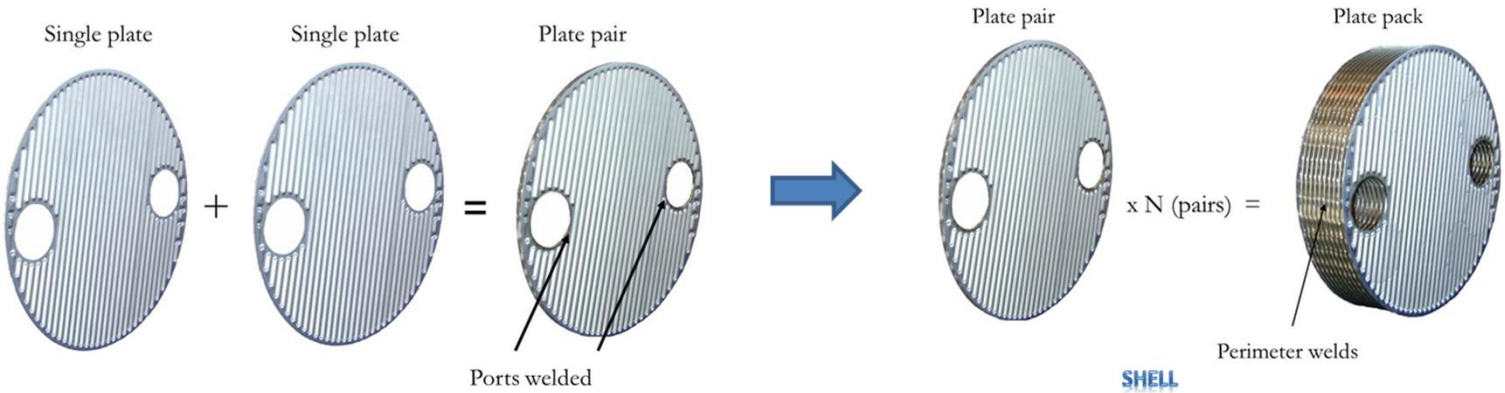


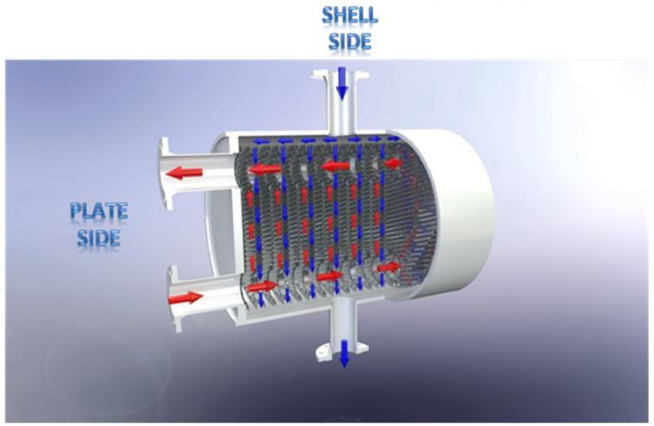


VAHTERUS

# PSHE PRODUCT PORTFOLIO

**Design pressure range**

- From vacuum to 150bar(g)
- On request up to 200 bar(g) (smaller size units)

**Temperature range**

- -196°C to +550°C
- Shock differential 300°C

**Duty**

- Even up to 200 MW
- Heat transfer area from 0.5 m² to 2000m²

**Plate diameters, approx**

- PSHE 2: 200 mm
- PSHE 3: 300 mm
- PSHE 4: 400 mm
- PSHE 5: 500 mm
- PSHE 6: 600 mm
- PSHE 7: 700 mm
- PSHE 9: 900 mm
- PSHE 12: 1200 mm
- PSHE 14: 1400 mm

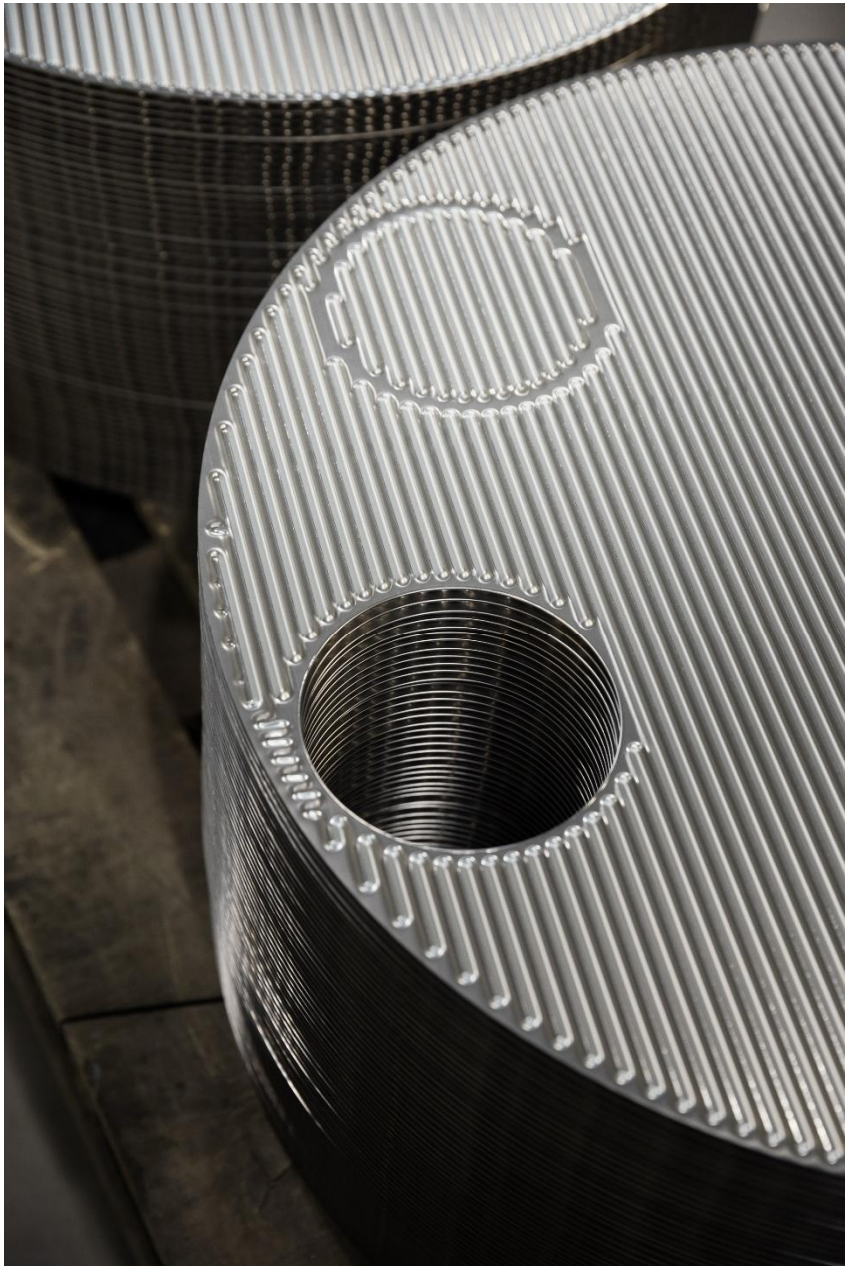

VAHTERUS

# WIDE MATERIAL OPTIONS

Up to 1.5mm

**Plate materials**

- AISI 316L / 304L
- Titanium Gr. 1 and Gr. 11
- Hastelloy (C22 & C276)
- Nickel  201
- 254 SMO
- AISI 904
- Duplex

**Shell materials**

- Carbon Steel
- AISI 316L / 304L
- Hastelloy
- 254 SMO
- AISI 904
- Duplex
- Titanium

VAHTERUS

# TAILOR MADE SOLUTONS

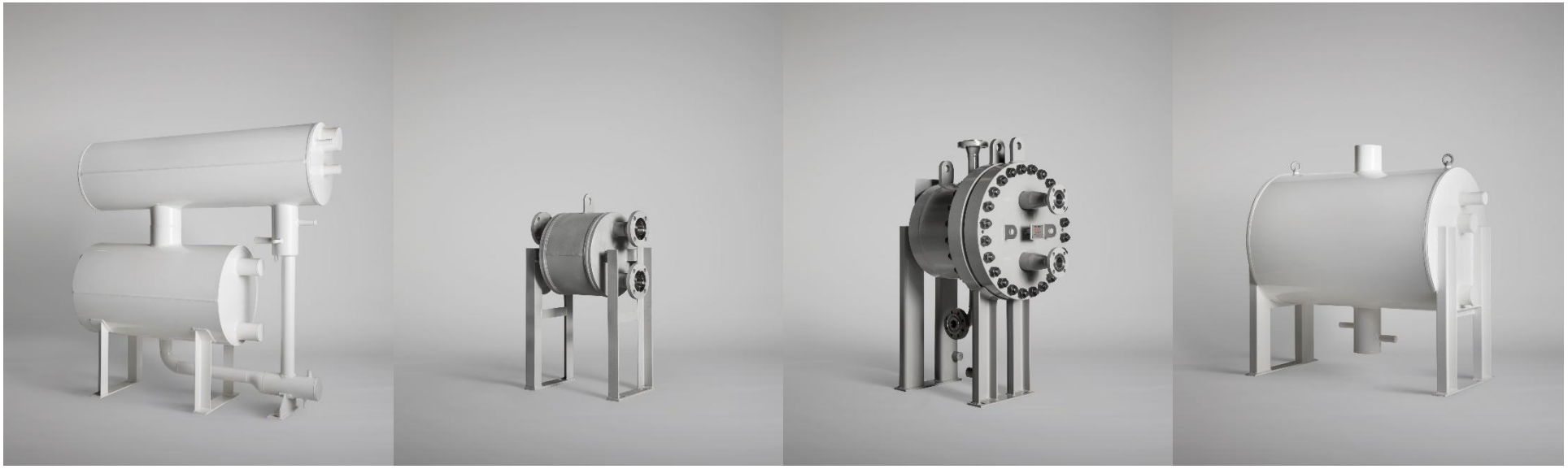

VAHTERUS

# **CLEANING** METHODS

- **Planning of avoiding fouling is the key, to postpone cleaning need. But when fouled:**
- **Chemical cleaning**
- **Mechanical cleaning (shell side)**
- **Mechanical cleaning (plate side)**

VAHTERUS

# Why to choose Vahterus and PSHE technology?

- The **original developer** of PSHE technology
- The **best knowledge** and **expertise** in the field
- We build strong & long lasting partnerships
- Strong focus into R&D. Latest production technologies
- Reliable delivery times agreed with customers
- We value accountability and transparency in all our operations

VAHTERUS

vahterus.com